PV Enabled EV Charging Station

James Del Rossi Prof. M Chuah

Computer Science and Engineering Lehigh University Bethlehem, PA 18015

Abstract

There are many organizations across the world that are interested in electric vehicle technology for this technology allows us to reduce CO_2 emission. However, there are still several challenges that need to be overcome before high EV penetration rate can be achieved. One hurdle is the expensive cost due to expensive EV batteries. Such cost can be reduced if their expected travel ranges can be reduced. One feasible solution is to provide large scale EV charging near office spaces which reduce the expected travel ranges on EV batteries. Another hurdle is the fear that widespread adoption of EVs may impact distribution systems significantly. Renewal energies can be used as part of a solution to make EV technology even greener. In this project, we propose PV enabled EV charging station to solve such challenges.

Background

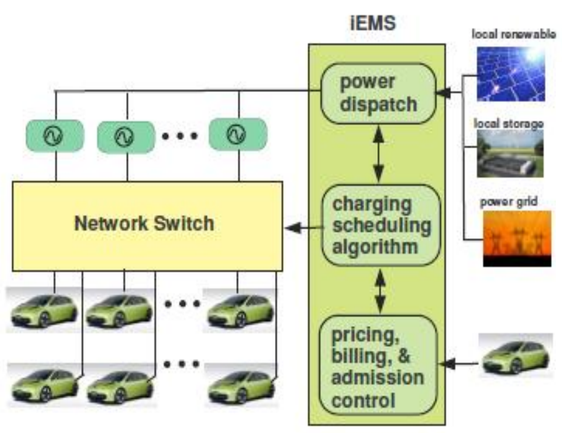

Future Public Charging Infrastructure[1]

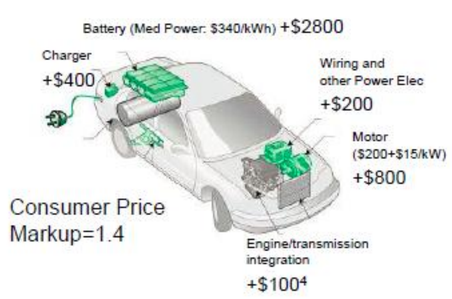

Component Cost of EV

More EVs will be on the roads in the near future. In big cities, large packing decks already exist near office buildings. It is natural that we can deploy charging infrastructure to such decks. Robust communication infrastructure needs to be designed such that charging controls can be securely communicated to charging stations. The total number of EVs that can be simultaneously charged depends on the available power capacity after meeting existing load demands. The additional renewal energy produced allows more EVs to be charged.
[1]

Research Thrust

The main research thrust is twofold:

1. Design an efficient PV enabled charging station using a highly efficient concentrated solar system.
2. Design a robust communication infrastructure that allows smooth operations of a large scale charging deck.

Concentrated Solar System designed by Prof Neti, Lehigh which provides 15% more solar power with smaller deployment area.

PV enabled EV charging system

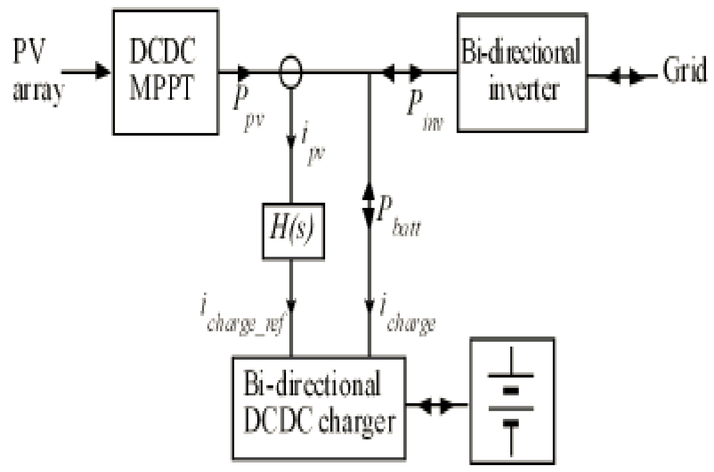

Block Diagram for PV enabled EV charging system

Current Portable PV system

Preliminary Solar Measurement

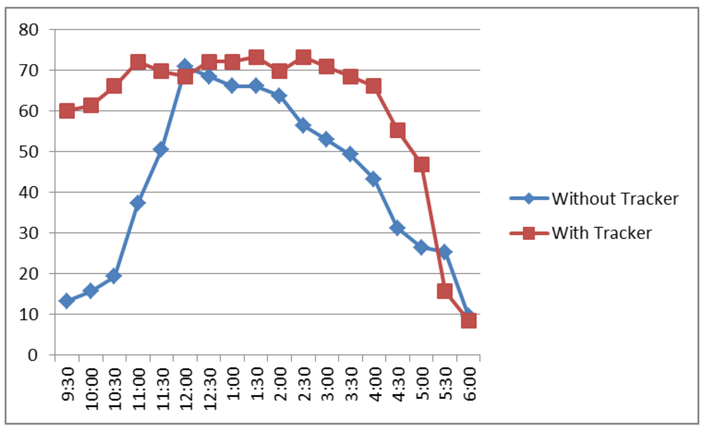

Measured Solar Output from Current PV system

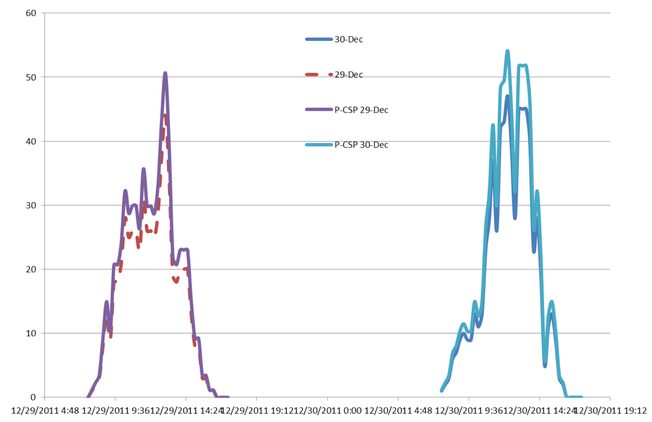

Current and Predicted PV output at a Bethlehem School Site

EV Charging System

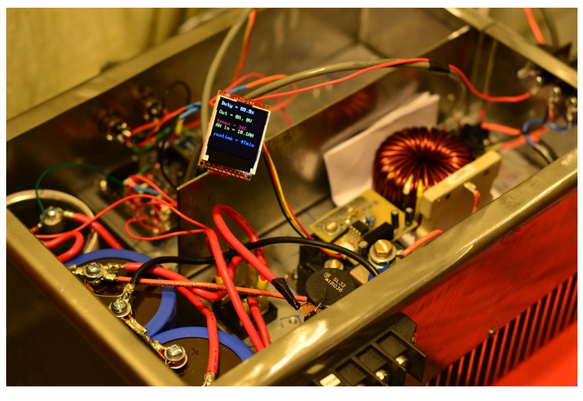

EV charger from ElectricMotorWerks

48V EV batteries from Electric MotorWerks

Preliminary Charger Simulation Controller and Charger

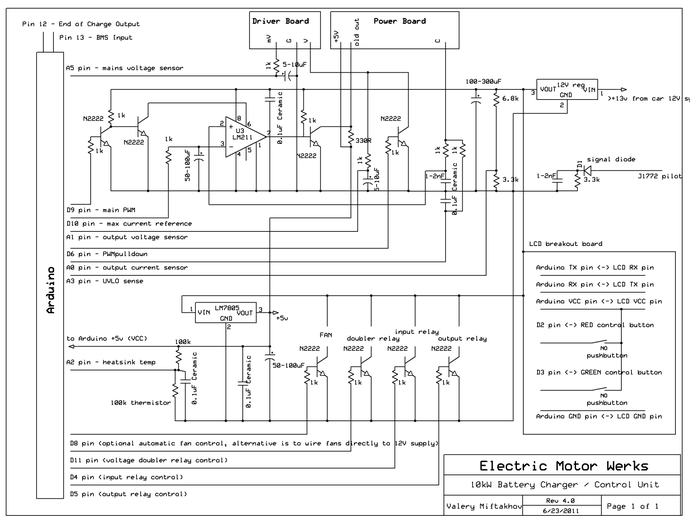

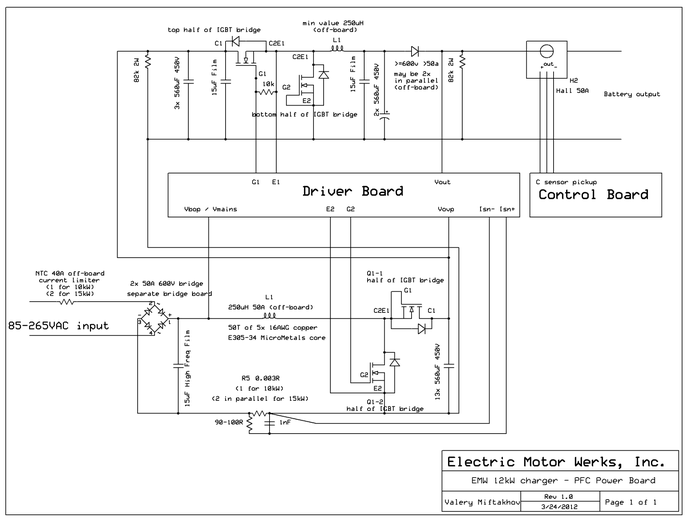

Acknowledgements

We wish to thank Ted Bowen, Prof. Neti, and Prof. Decker for answering our questions during our research.

LEHIGH UNIVERSITY